CmStick/CI

Article-No:
1001-02-160-0031

Description

The CmStick/CI is the core of the CodeMeter Digital Rights Management system featuring a form factor of an internal USB flash disk module with a standard 2.00 mm connector. It contains a SmartCard chip including a secure memory of about 384 kbyte available for storing thousands of licenses. The basic idea of the revolutionary CodeMeter concept is that licenses can be stored for many products even from many different vendors at the same time.

License Options are: Text (description of an entry), Unit Counter (number of runs or actually run time of a license), Activation Time (the license is valid from), Expiration Time (the license is valid until), Usage Period (starts at first time), Feature Map (up to 32 modules or versions), License Quantity (concurrent use / floating network licenses), Protected Data / Extended Protected Data (128x256 bytes read-only data), Hidden Data (128x256 bytes only readable with password; usable as secret/private key), Secret Data (128x256 bytes non-readable, only usable as secret/private key), User Data (unsecured 256 bytes), Customer Owned License Information (256 bytes).

Used algorithms: 128 bit AES, SHA-256, 2048 bit RSA, 224 bit ECC.

The used SmartCard chip contains a random number generator according to FIPS140-1 and fulfills EAL 4+ (Common Criteria certified).

Technical Specifications

The CodeMeter technology is covered by US 7.145.297 and other patents.

- **Interface: Hi-Speed USB 2.0 certified, backward compatible with USB 1.1**
- **Connector: Standard 2.0 mm**
- **CodeMeter License memory:**
  - **Data retention: >10 years @ room temperature**
  - **Endurance: >10 million License updates, depending on the license type**
- **Power supply: 5 V bus-powered, < 20mA**
- **Temperature: -25 ... +85 degree C, non-condensing**
- **MTBF (Mean Time Between Failures): > 3 Million hours**
- **Dimensions: ~10 mm x ~15 mm x ~5 mm**
- **Weight: ~0.5g**
- **Warranty: 36 months**

Certificates

The CmStick/CI is tested and qualified with the following standards:

CE-Conformity | European Certificates

Radiated emissions 150 kHz…6 GHz:

- EN 55022:2006 + A1:2007
- IEC/CISPR 22:2005, modified + A1:2005 limits for Class B equipment

Immunity: Radiated RF electromagnetic field, electrostatic discharge, injected currents (RF) unsymmetrical and fast transients (burst) unsymmetrical:

- EN 55024:1998 + A1:2001 + A2:2003
- IEC/CISPR 24:1997, modified + A1:2001 + A2:2002

The detailed test report from VDE Testing and Certification Institute, File 2387800-3250-0002/120746, 2009-09-08 is available on request.

International Certificates

FCC Part 15, Subpart B, File 09047-AU01+E01

VCCI 2003-04 (Japan)

KCC 7UNR-XW14-FCI1-AWGX, XWK-1001-02-xxx (A) (South Korea)

C-Tick, ACMA Supplier Code N 30970

Other Certificates

VDE Licnese no. 129382

All CmStick/CI are fully compliant according to EC Directives 2002/96/EC (WEEE, Reg-No. DE90465365), 2004/108/EC, 2011/65/EC and ACPEIP
and REACH, EC Regulation 1907/2006.

Ordering Information

P/N 1001-02-160-0031: CmStick/CI bulk

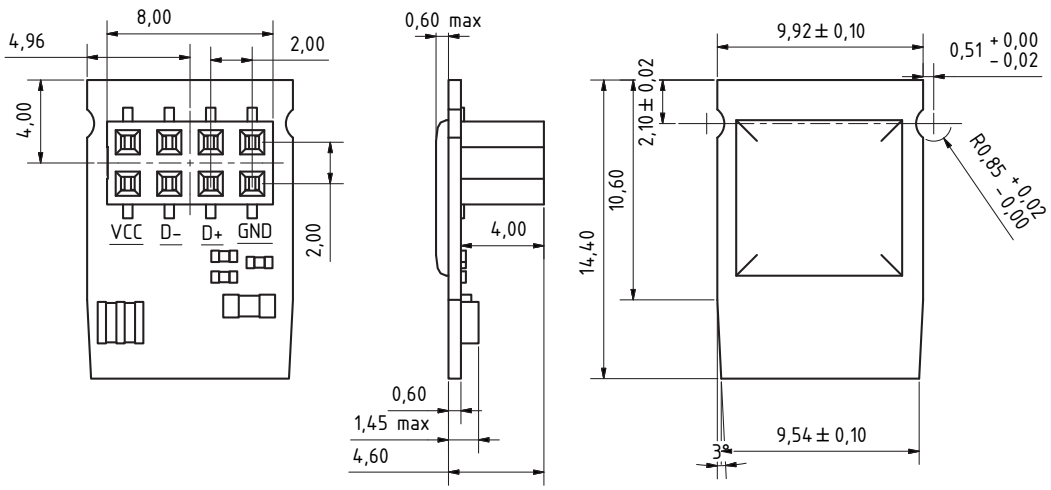

All dimensions in millimeter. Subject to change without notice.

WIBU-SYSTEMS AG
Rueppurrer Strasse 52-54
D-76137 Karlsruhe
Tel: +49-721-93172-0
Fax: +49-721-93172-22
info@wibu.com
www.wibu.com